NO	DESCRIPTION	DATE	CHECK
1	Modified shape to accommodate adjustable width 55mm –> 50mm	260320	JWKim

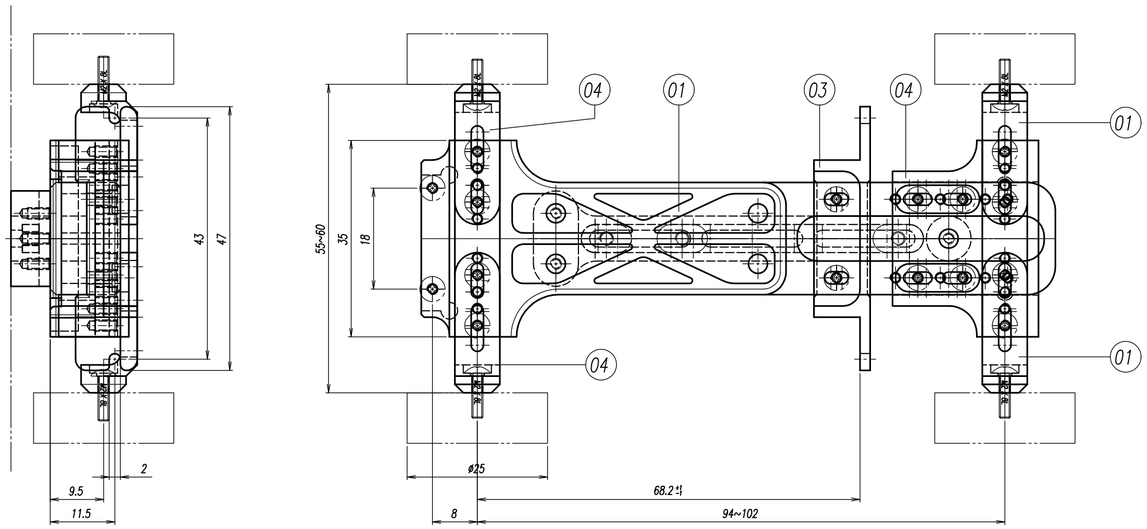

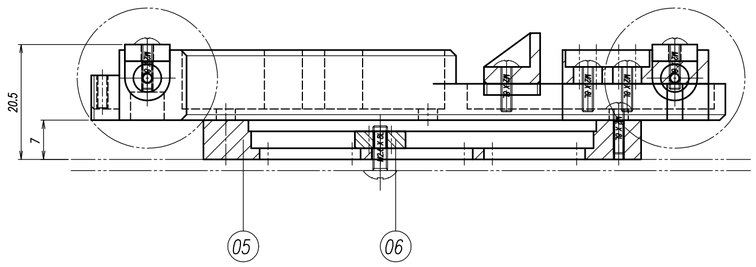

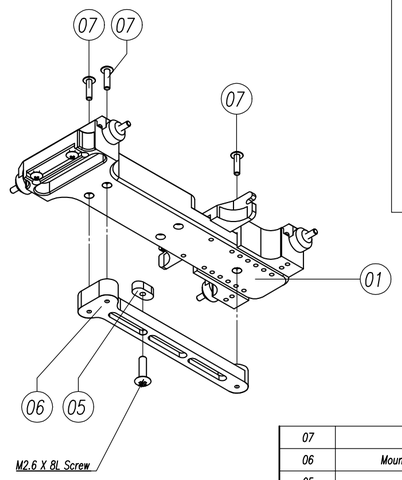

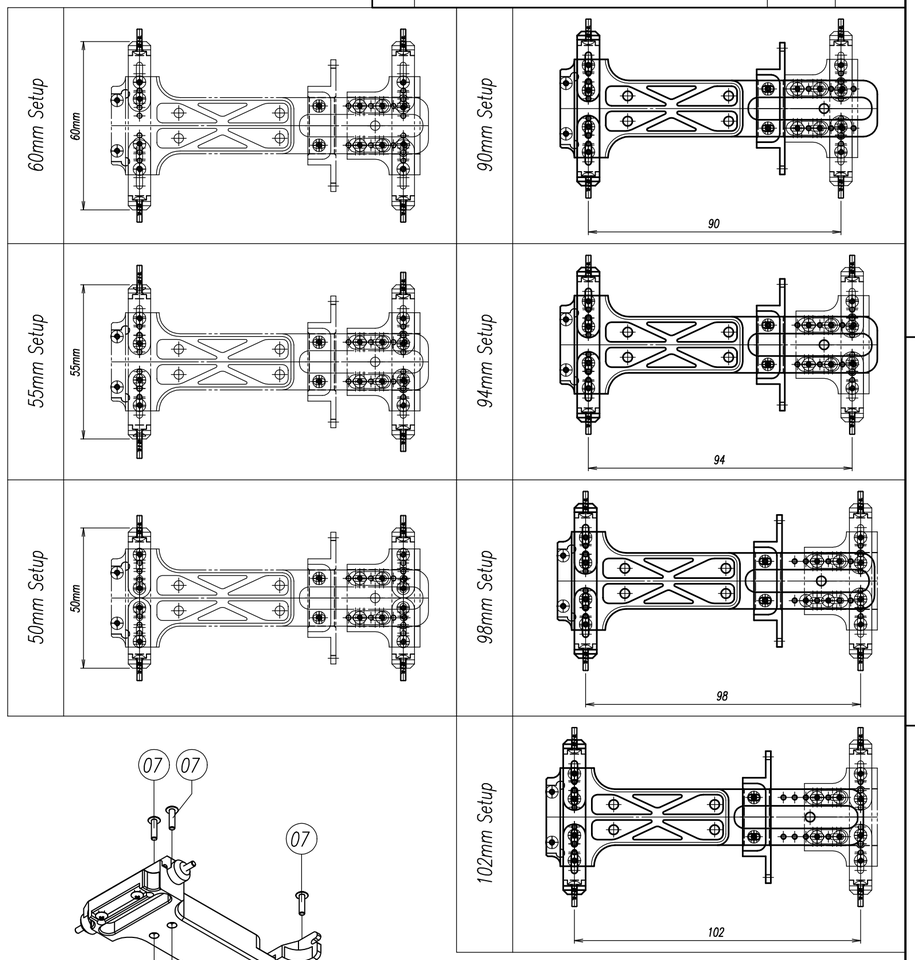

Dimesion	Tolerance
0.5~30	±0.05
30~120	±0.1
120~315	±0.15
315~1000	±0.2
1000~2000	±0.5
2000~3000	±1.0

Number	Part Name	Drawing Number	Material	Finish	Quantity
07	Screw	Trust_M2X8L	–	-	23
06	Mount Case Block	F01–0006–01	Polyacetal	-	1
05	Post	F01–0005–02	AL6061	Sanding Gloss Black Anodizing	1
04	Wheel Hub	F01–0001–02	AL6061	Sanding Gloss Black Anodizing	4
03	Body Mount	F01–0004–01	AL6061	Sanding Gloss Black Anodizing	1
02	Rear Wheel Mount	F01–0003–01	AL6061	Sanding Gloss Black Anodizing	1
01	Main Body	F01–0002–01	AL6061	Sanding Gloss Black Anodizing	1

Number	Part Name	Drawing Number	Material	Finish	Quantity
01	Mini–Z Dummy Frame	F01–1001–03	–	-	1

Project Name	Mini–Z Dummy Frame				Projection
Project Number	F01–1000–01				
Design	Check	Approved	Unit	Scale	Sheet
JWKim			MM / inch	2:1	A1

IDESIGN MECHANICAL
JD.Co.,LTD.
e-mail: jong2755@gmail.com
phone: +82-10-4841-3755